VOSS SOLID USA

LYNX ALUMINUM SIDING (HVHZ)

GENERAL NOTES:

1. THE PRODUCT SHOWN HEREIN IS DESIGNED AND MANUFACTURED TO COMPLY WITH THE CURRENT EDITION FLORIDA BUILDING CODE (FBC) **INCLUDING** HVHZ. ALL PRODUCTS UNDER THE SCOPE OF THIS DOCUMENT HAVE BEEN EVALUATED ACCORDING TO THE FOLLOWING:
   - TAS 202-94
   - TAS 203-94

2. ADEQUACY OF THE EXISTING STRUCTURAL CONCRETE/MASONRY, 2X WOOD AND METAL STUD FRAMING AS A MAIN WIND FORCE RESISTING SYSTEM CAPABLE OF WITHSTANDING AND TRANSFERRING APPLIED PRODUCT LOADS TO THE FOUNDATION IS THE RESPONSIBILITY OF THE ENGINEER OR ARCHITECT OF RECORD FOR THE PROJECT OF INSTALLATION.

3. INSTALL INDIVIDUAL INSTALLATION ANCHORS WITHIN A TOLERANCE OF ±1/4 INCH OF THE DEPICTED LOCATION IN THE ANCHOR LAYOUT DETAIL (I.E., WITHOUT CONSIDERATION OF TOLERANCES). TOLERANCES ARE NOT CUMULATIVE FROM ONE INSTALLATION ANCHOR TO THE NEXT.

4. THE INSTALLATION DETAILS DESCRIBED HEREIN ARE GENERIC AND MAY NOT REFLECT ACTUAL CONDITIONS FOR A SPECIFIC SITE. IF SITE CONDITIONS CAUSE INSTALLATION TO DEVIATE FROM THE REQUIREMENTS DETAILED HEREIN, A LICENSED ENGINEER OR ARCHITECT SHALL PREPARE SITE SPECIFIC DOCUMENTS FOR USE WITH THIS DOCUMENT.

5. SIDING MATERIAL: ALUMINUM (MIN. 6063-T5).

6. INSTALLATION OF SIDING ACCESSORIES SHALL BE DONE IN ACCORDANCE WITH THE FLORIDA BUILDING CODE AND THE MANUFACTURER'S INSTRUCTIONS.

7. ALL STRUCTURAL MATERIALS & DISSIMILAR METALS SHALL BE PROTECTED, TREATED, PAINTED, COATED, AND/OR ISOLATED AS REQUIRED IN THE APPLICABLE SECTIONS OF THE CURRENT FLORIDA BUILDING CODE AND REFERENCED DESIGN SPECIFICATIONS.

TABLE OF CONTENTS

SHEET	SHEET DESCRIPTION
1	GENERAL NOTES AND DESIGN RATING
2	TYPICAL ELEVATION
3	VERTICAL SECTIONS
4	VERTICAL SECTIONS
5	HORIZONTAL SECTIONS
6	HORIZONTAL SECTIONS
7	HORIZONTAL SECTIONS
8	INSTALLATION NOTES AND ANCHOR TABLE
9	BILL OF MATERIALS AND COMPONENTS

DESIGN RATING

DESIGN PRESSURE	MISSILE IMPACT
- 90 PSF	N/A

VOSS SOLID USA
4035 CHEYENNE CT.
CHINO, CALIFORNIA 91710
PH: (909) 393-2800 FX: (909) 393-2831

TITLE: LYNX ALUMINUM SIDING (HVHZ)
GENERAL NOTES & DESIGN RATING

PREPARED BY:
BUILDING DROPS, INC.
1900 NE MIAMI COURT, SUITE 2-15
MIAMI, FL 33132
PH: (954) 399-8478
FAX: (954) 744-4738
WEB: www.buildingdrops.com

REMARKS	BY	DATE

THE INSTALLATION DETAILS DESCRIBED HEREIN ARE GENERIC AND MAY NOT REFLECT ACTUAL CONDITIONS FOR A SPECIFIC SITE. IF SITE CONDITIONS CAUSE INSTALLATION TO DEVIATE FROM THE REQUIREMENTS DETAILED HEREIN, A LICENSED ENGINEER OR ARCHITECT SHALL PREPARE SITE SPECIFIC DOCUMENTS FOR USE WITH THIS DOCUMENT.

Digitally signed by Hermes F. Norero, P.E.
Reason: I am approving this document
Date: 2025.11.25 14:57:18 -05'00'

HERMES F. NORERO LICENSE No. 73778 STATE OF FLORIDA PROFESSIONAL ENGINEER

HERMES F. NORERO P.E.
FLORIDA P.E. No 73778
BUILDING DROPS, INC
1900 NE MIAMI COURT, SUITE 2-15
MIAMI, FL 33132
FBPE CERT. OF AUTHORIZATION No. 29578

FL #: FL47912

DATE: 11.05.2025

DWG. BY: MS

CHK. BY: HFN

SCALE: NTS

DWG. #: VSU001

SHEET: 1 OF 9

11/25/2025 2:27 PM
c:\users\mengqisun\building drops, inc\building drops landing - common\projects\all green building products\fbc-25-0348.1 - fbc submittal - lynx siding\dwgs\vsu001.dwg

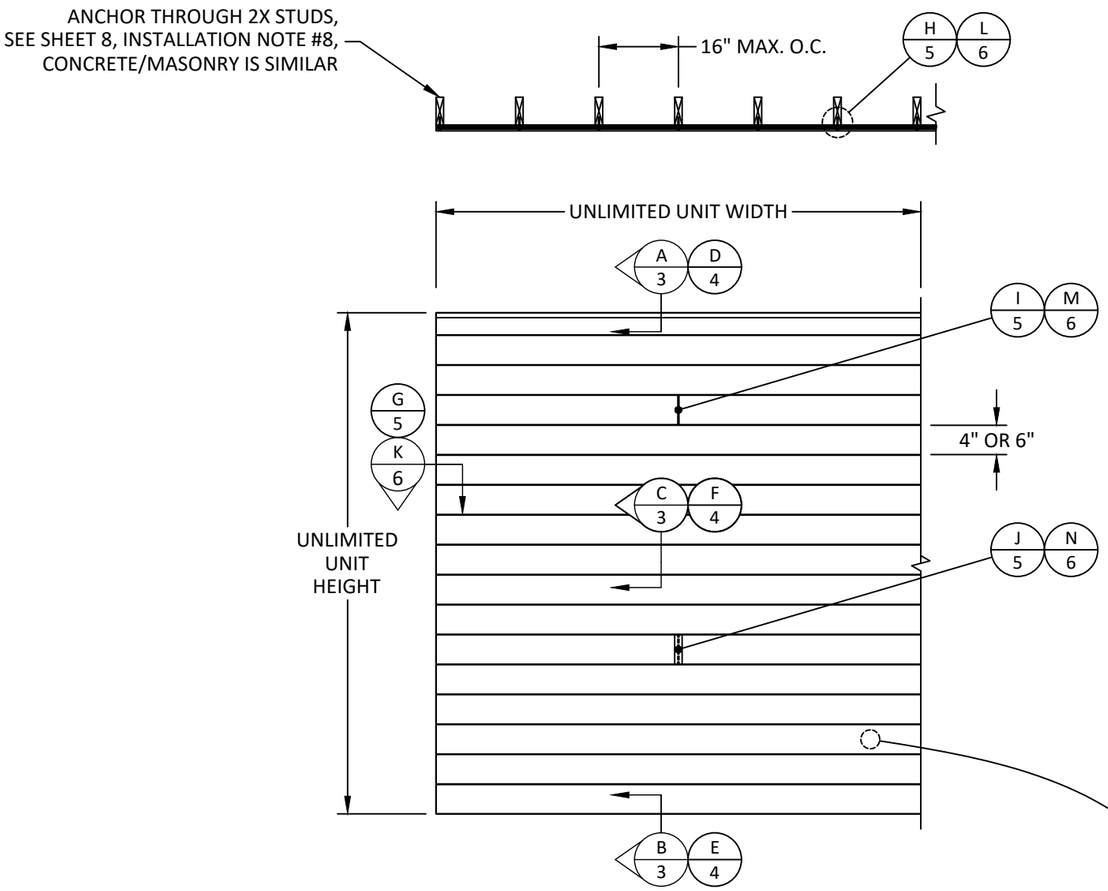

TYPICAL ELEVATION

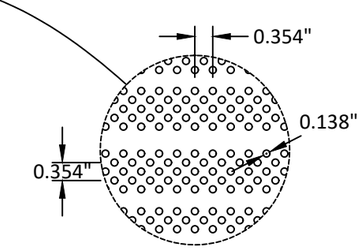

ALTERNATE VENTED PANEL DETAIL

NET FREE AREA 16%

SCALE 1:10

VOSS SOLID USA
4035 CHEYENNE CT.
CHINO, CALIFORNIA 91710
PH: (909) 393-2800 FX: (909) 393-2831

TITLE: LYNX ALUMINUM SIDING (HVHZ)

TYPICAL ELEVATION

PREPARED BY:
BUILDING DROPS, INC.
1900 NE MIAMI COURT, SUITE 2-15
MIAMI, FL 33132
PH: (954) 399-8478
FAX: (954) 744-4738
WEB: www.buildingdrops.com

REMARKS	BY	DATE

THE INSTALLATION DETAILS DESCRIBED HEREIN ARE GENERIC AND MAY NOT REFLECT ACTUAL CONDITIONS FOR A SPECIFIC SITE. IF SITE CONDITIONS CAUSE INSTALLATION TO DEVIATE FROM THE REQUIREMENTS DETAILED HEREIN, A LICENSED ENGINEER OR ARCHITECT SHALL PREPARE SITE SPECIFIC DOCUMENTS FOR USE WITH THIS DOCUMENT.

HERMES F. NORERO LICENSE No. 73778 STATE OF FLORIDA PROFESSIONAL ENGINEER

HERMES F. NORERO P.E.
FLORIDA P.E. No 73778
BUILDING DROPS, INC
1900 NE MIAMI COURT, SUITE 2-15
MIAMI, FL 33132
FBPE CERT. OF AUTHORIZATION No. 29578

FL #: FL47912

DATE: 11.05.2025

DWG. BY: MS

CHK. BY: HFN

SCALE: NTS

DWG. #: VSU001

SHEET: 2 OF 9

11/25/2025 2:27 PM
c:\users\mengdsun\building drops, inc\building drops landing - common\projects\all green building products\fbc-25-0348.1 - fbc submittal - lynx siding\dwgs\vsu001.dwg

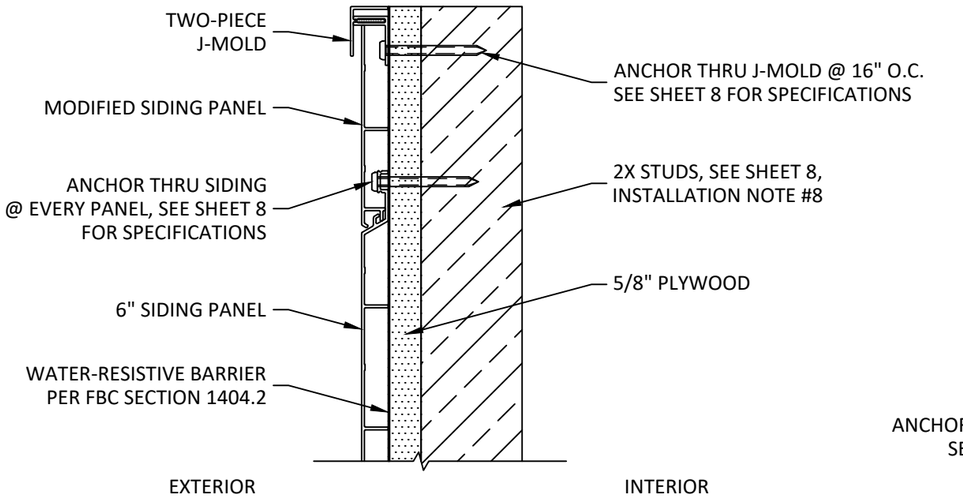

A/3 VERTICAL SECTION

SIDING TOP

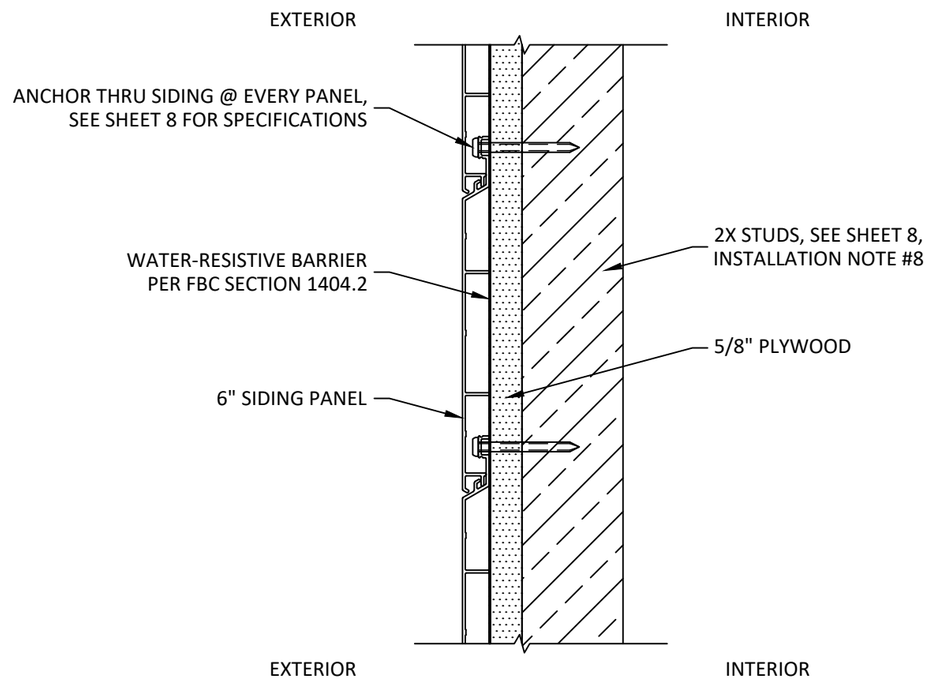

C/3 VERTICAL SECTION

INTERMEDIATE SIDING

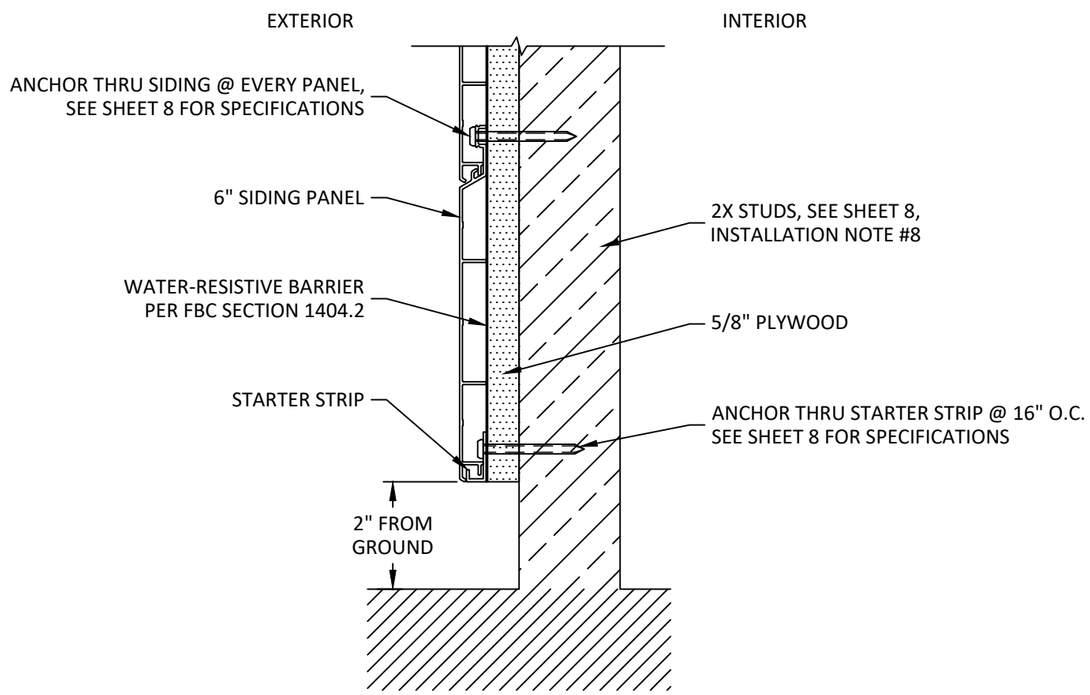

B/3 VERTICAL SECTION

SIDING BOTTOM

NOTE:
1. 6" SIDING PANEL SHOWN, 4" SIDING PANEL IS SIMILAR.

VOSS SOLID USA
4035 CHEYENNE CT.
CHINO, CALIFORNIA 91710
PH: (909) 393-2800 FX: (909) 393-2831

TITLE: LYNX ALUMINUM SIDING (HVHZ) VERTICAL SECTIONS

PREPARED BY: BUILDING DROPS, INC.
1900 NE MIAMI COURT, SUITE 2-15
MIAMI, FL 33132
PH: (954) 399-8478
FAX: (954) 744-4738
WEB: www.buildingdrops.com

REMARKS	BY	DATE

THE INSTALLATION DETAILS DESCRIBED HEREIN ARE GENERIC AND MAY NOT REFLECT ACTUAL CONDITIONS FOR A SPECIFIC SITE. IF SITE CONDITIONS CAUSE INSTALLATION TO DEVIATE FROM THE REQUIREMENTS DETAILED HEREIN, A LICENSED ENGINEER OR ARCHITECT SHALL PREPARE SITE SPECIFIC DOCUMENTS FOR USE WITH THIS DOCUMENT.

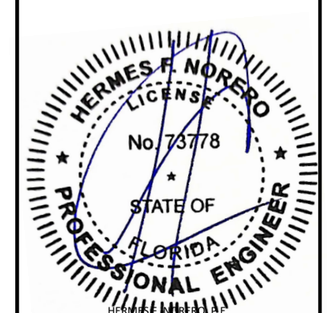

HERMES F. NORERO P.E.
FLORIDA P.E. No 73778
BUILDING DROPS, INC
1900 NE MIAMI COURT, SUITE 2-15
MIAMI, FL 33132
FBPE CERT. OF AUTHORIZATION No. 29578

FL #: FL47912

DATE: 11.05.2025

DWG. BY: MS | CHK. BY: HFN

SCALE: NTS

DWG. #: VSU001

SHEET: 3 OF 9

11/25/2025 2:27 PM
c:\users\mengotsun\building drops, inc\building drops landing - common\projects\all green building products\fbc-25-0348.1 - fbc submittal - lynx siding\dwgs\vsu001.dwg

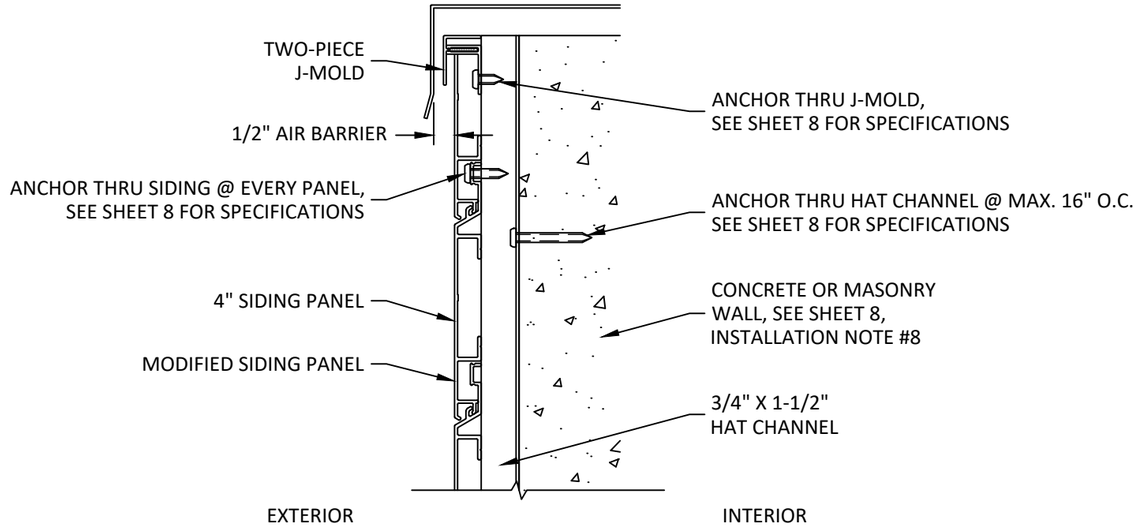

D/4 VERTICAL SECTION

SIDING TOP

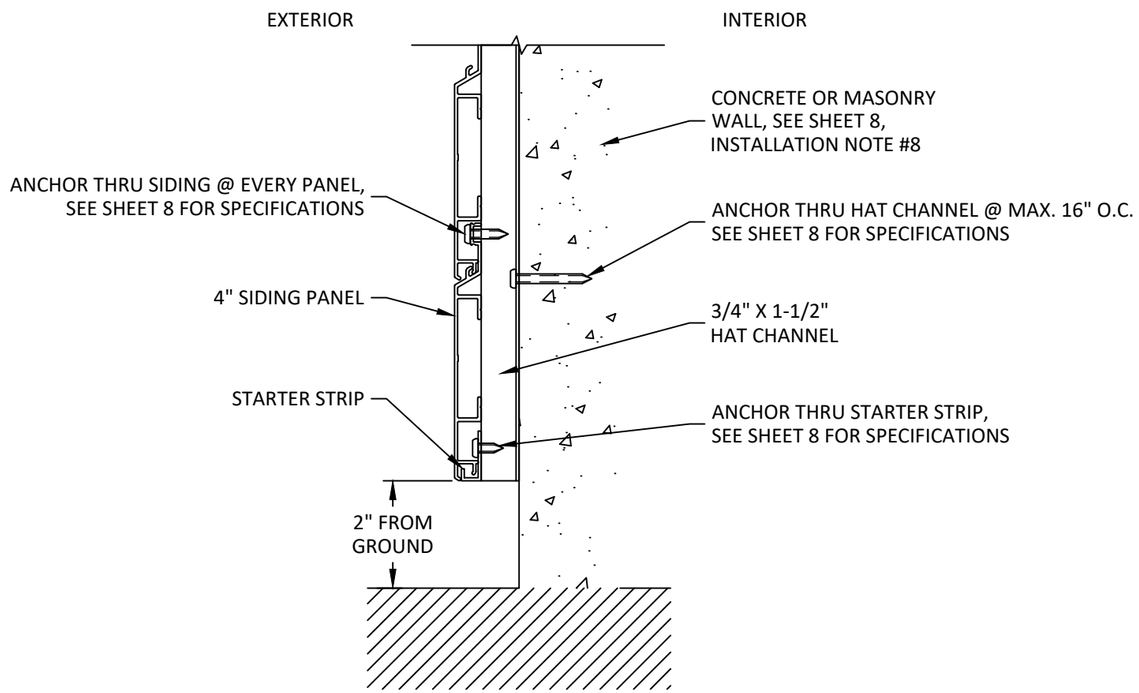

E/4 VERTICAL SECTION

SIDING BOTTOM

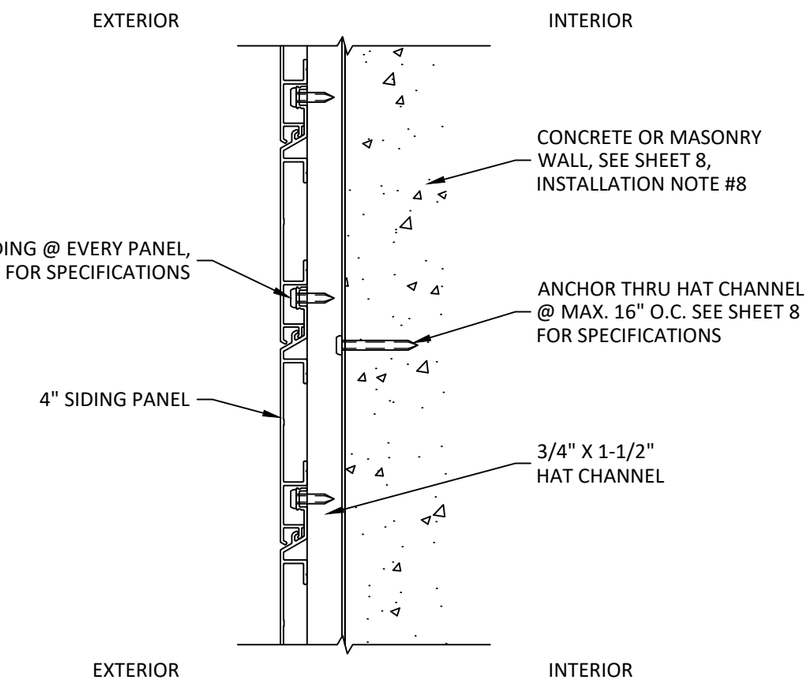

F/4 VERTICAL SECTION

INTERMEDIATE SIDING

NOTE:
1. 4" SIDING PANEL SHOWN, 6" SIDING PANEL IS SIMILAR.
2. VERTICAL SECTIONS OF HORIZONTAL SIDING PANELS ARE SHOWN, THE HORIZONTAL SECTIONS OF VERTICAL SIDING PANELS ARE SIMILAR.

VOSS SOLID USA
4035 CHEYENNE CT.
CHINO, CALIFORNIA 91710
PH: (909) 393-2800 FX: (909) 393-2831

TITLE: LYNX ALUMINUM SIDING (HVHZ) VERTICAL SECTIONS

PREPARED BY: BUILDING DROPS, INC.
1900 NE MIAMI COURT, SUITE 2-15
MIAMI, FL 33132
PH: (954) 399-8478
FAX: (954) 744-4738
WEB: www.buildingdrops.com

REMARKS	BY	DATE

THE INSTALLATION DETAILS DESCRIBED HEREIN ARE GENERIC AND MAY NOT REFLECT ACTUAL CONDITIONS FOR A SPECIFIC SITE. IF SITE CONDITIONS CAUSE INSTALLATION TO DEVIATE FROM THE REQUIREMENTS DETAILED HEREIN, A LICENSED ENGINEER OR ARCHITECT SHALL PREPARE SITE SPECIFIC DOCUMENTS FOR USE WITH THIS DOCUMENT.

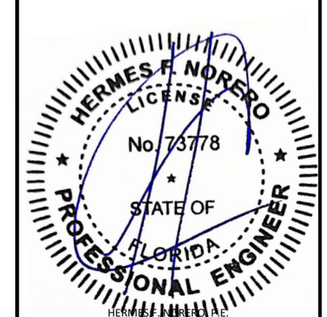

HERMES F. NORERO P.E.
FLORIDA P.E. No 73778
BUILDING DROPS, INC
1900 NE MIAMI COURT, SUITE 2-15
MIAMI, FL 33132
FBPE CERT. OF AUTHORIZATION No. 29578

FL #: FL47912

DATE: 11.05.2025

DWG. BY: MS | CHK. BY: HFN

SCALE: NTS

DWG. #: VSU001

SHEET: 4 OF 9

11/25/2025 2:27 PM
c:\users\mengcisun\building drops, inc\building drops landing - common\projects\all green building products\fbc-25-0348.1 - fbc submittal - lynx siding\dwgs\vsu001.dwg

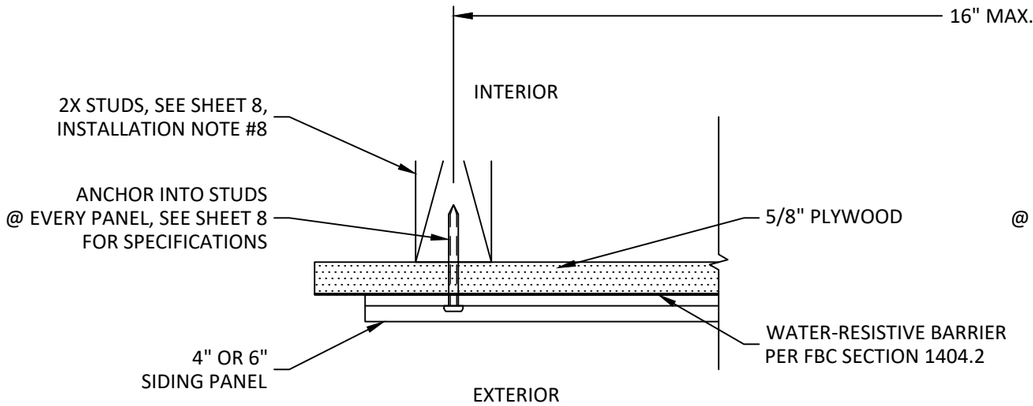

G/5 HORIZONTAL SECTION
SIDING SIDE

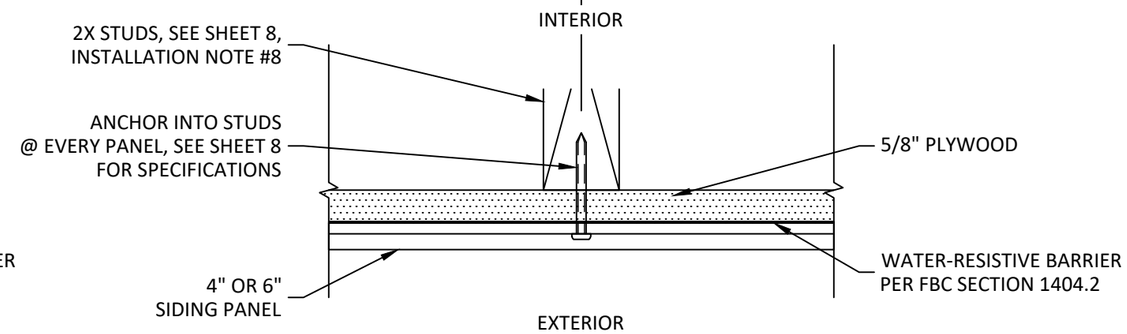

H/5 HORIZONTAL SECTION
SIDING INTERMEDIATE SUPPORT

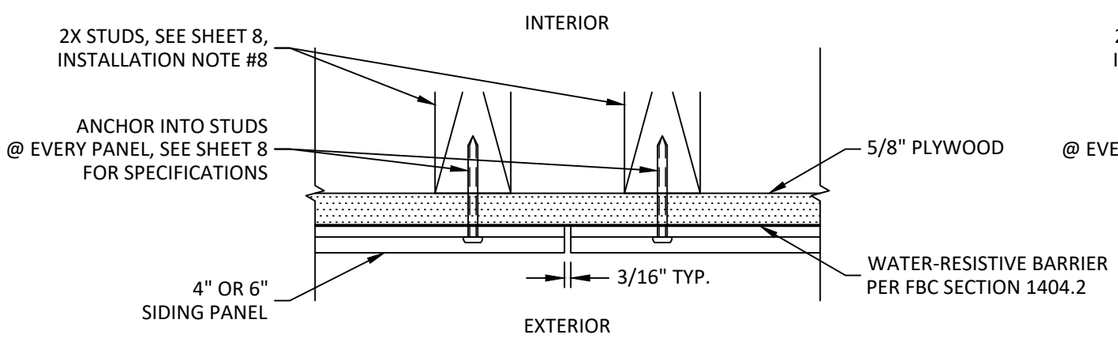

I/5 HORIZONTAL SECTION
SIDING SEAM

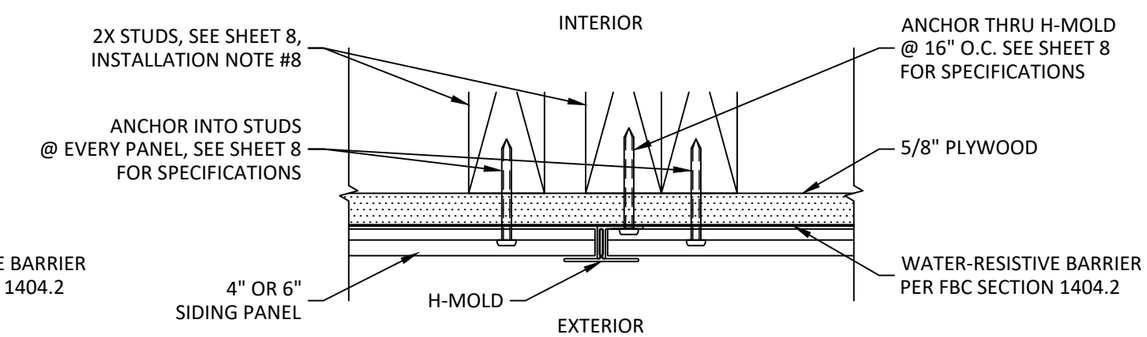

J/5 HORIZONTAL SECTION
H-MOLD JOINT

VOSS SOLID USA
4035 CHEYENNE CT.
CHINO, CALIFORNIA 91710
PH: (909) 393-2800 FX: (909) 393-2831

TITLE: LYNX ALUMINUM SIDING (HVHZ) HORIZONTAL SECTIONS

PREPARED BY: BUILDING DROPS, INC.
1900 NE MIAMI COURT, SUITE 2-15
MIAMI, FL 33132
PH: (954) 399-8478
FAX: (954) 744-4738
WEB: www.buildingdrops.com

REMARKS	BY	DATE

THE INSTALLATION DETAILS DESCRIBED HEREIN ARE GENERIC AND MAY NOT REFLECT ACTUAL CONDITIONS FOR A SPECIFIC SITE. IF SITE CONDITIONS CAUSE INSTALLATION TO DEVIATE FROM THE REQUIREMENTS DETAILED HEREIN, A LICENSED ENGINEER OR ARCHITECT SHALL PREPARE SITE SPECIFIC DOCUMENTS FOR USE WITH THIS DOCUMENT.

HERMES F. NORERO LICENSE No. 73778 STATE OF FLORIDA PROFESSIONAL ENGINEER

HERMES F. NORERO P.E.
FLORIDA P.E. No 73778
BUILDING DROPS, INC
1900 NE MIAMI COURT, SUITE 2-15
MIAMI, FL 33132
FBPE CERT. OF AUTHORIZATION No. 29578

FL #: FL47912

DATE: 11.05.2025

DWG. BY: MS | CHK. BY: HFN

SCALE: NTS

DWG. #: VSU001

SHEET: 5 OF 9

11/25/2025 2:27 PM
c:\users\mengisun\building drops, inc\building drops landing - common\projects\all green building products\fbc-25-0348.1 - fbc submittal - lynx siding\dwgs\vsu001.dwg

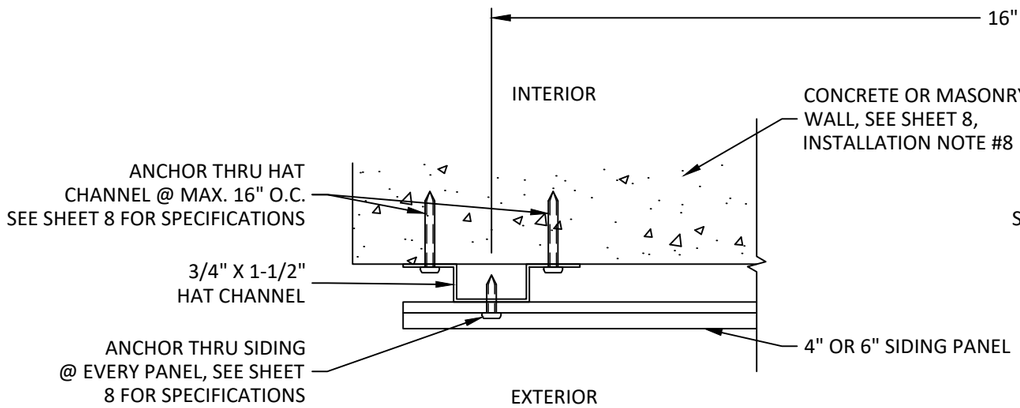

K/6 HORIZONTAL SECTION
SIDING SIDE

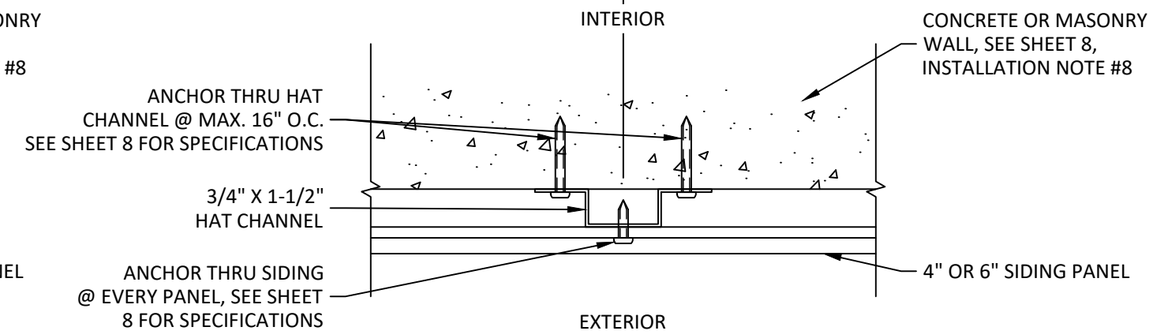

L/6 HORIZONTAL SECTION
SIDING INTERMEDIATE SUPPORT

NOTE:
1. HORIZONTAL SECTIONS OF HORIZONTAL SIDING PANELS ARE SHOWN, THE VERTICAL SECTIONS OF VERTICAL SIDING PANELS ARE SIMILAR.

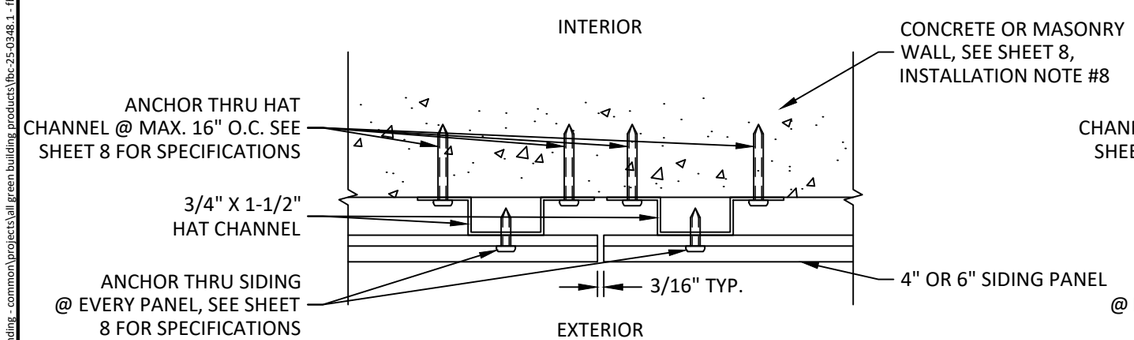

M/6 HORIZONTAL SECTION
SIDING SEAM

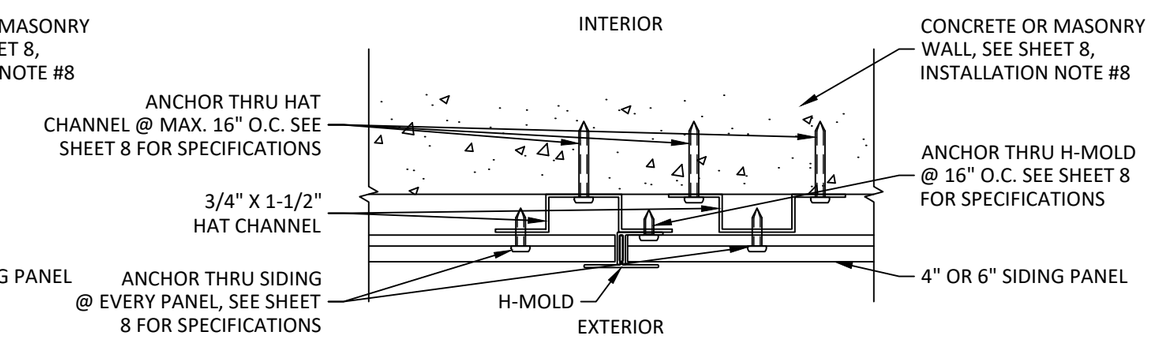

N/6 HORIZONTAL SECTION
H-MOLD JOINT

VOSS SOLID USA
4035 CHEYENNE CT.
CHINO, CALIFORNIA 91710
PH: (909) 393-2800 FX: (909) 393-2831

TITLE: LYNX ALUMINUM SIDING (HVHZ) HORIZONTAL SECTIONS

PREPARED BY: BUILDING DROPS, INC.
1900 NE MIAMI COURT, SUITE 2-15
MIAMI, FL 33132
PH: (954) 399-8478
FAX: (954) 744-4738
WEB: www.buildingdrops.com

REMARKS	BY	DATE

THE INSTALLATION DETAILS DESCRIBED HEREIN ARE GENERIC AND MAY NOT REFLECT ACTUAL CONDITIONS FOR A SPECIFIC SITE. IF SITE CONDITIONS CAUSE INSTALLATION TO DEVIATE FROM THE REQUIREMENTS DETAILED HEREIN, A LICENSED ENGINEER OR ARCHITECT SHALL PREPARE SITE SPECIFIC DOCUMENTS FOR USE WITH THIS DOCUMENT.

HERMES F. NORERO LICENSE No. 73778 STATE OF FLORIDA PROFESSIONAL ENGINEER

HERMES F. NORERO P.E.
FLORIDA P.E. No 73778
BUILDING DROPS, INC
1900 NE MIAMI COURT, SUITE 2-15
MIAMI, FL 33132
FBPE CERT. OF AUTHORIZATION No. 29578

FL #: FL47912
DATE: 11.05.2025
DWG. BY: MS
CHK. BY: HFN
SCALE: NTS
DWG. #: VSU001
SHEET: 6 OF 9

11/25/2025 2:27 PM
c:\users\mengosun\building drops, inc\building drops landing - common\projects\all green building products\fbc 25-0348.1 - fbc submittal - lynx siding\dwgs\vsu001.dwg

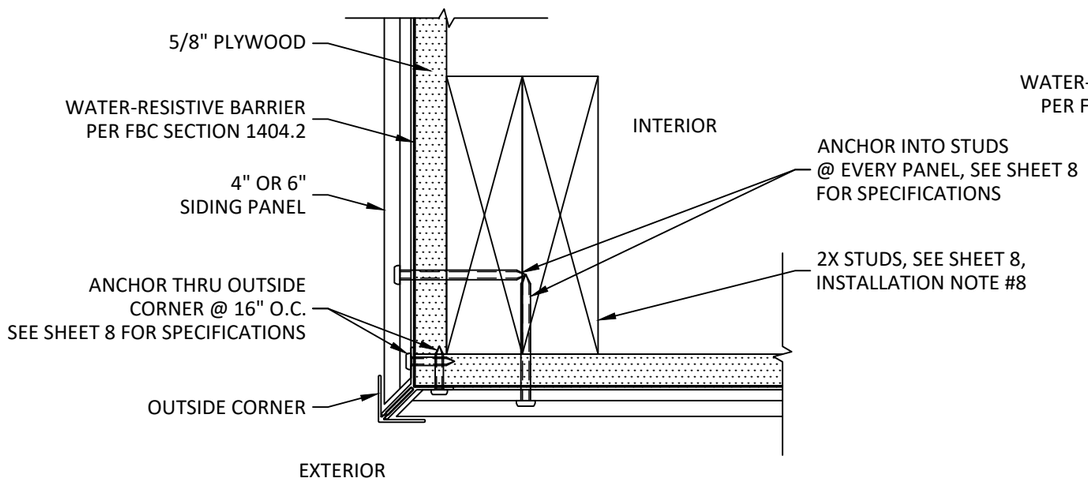

O/7 HORIZONTAL SECTION
OUTSIDE CORNER

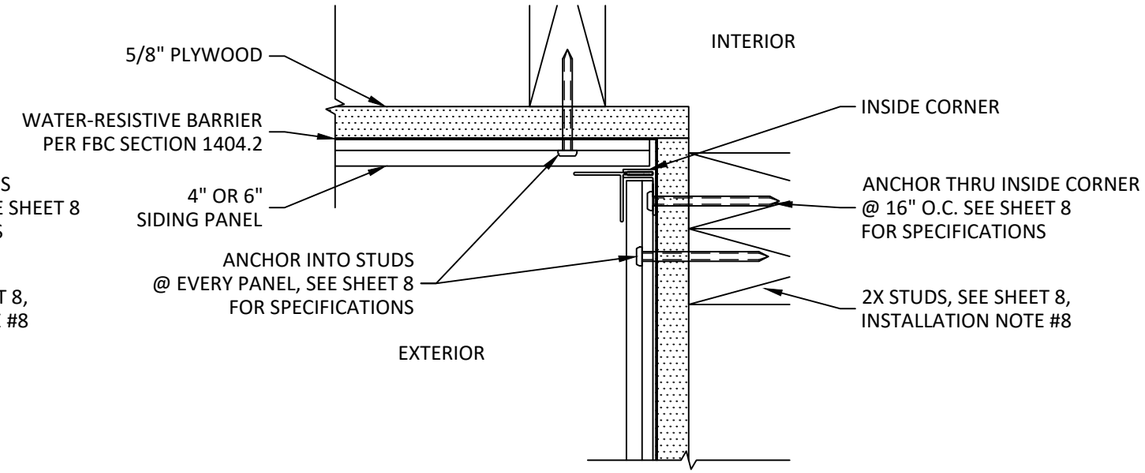

P/7 HORIZONTAL SECTION
INSIDE CORNER

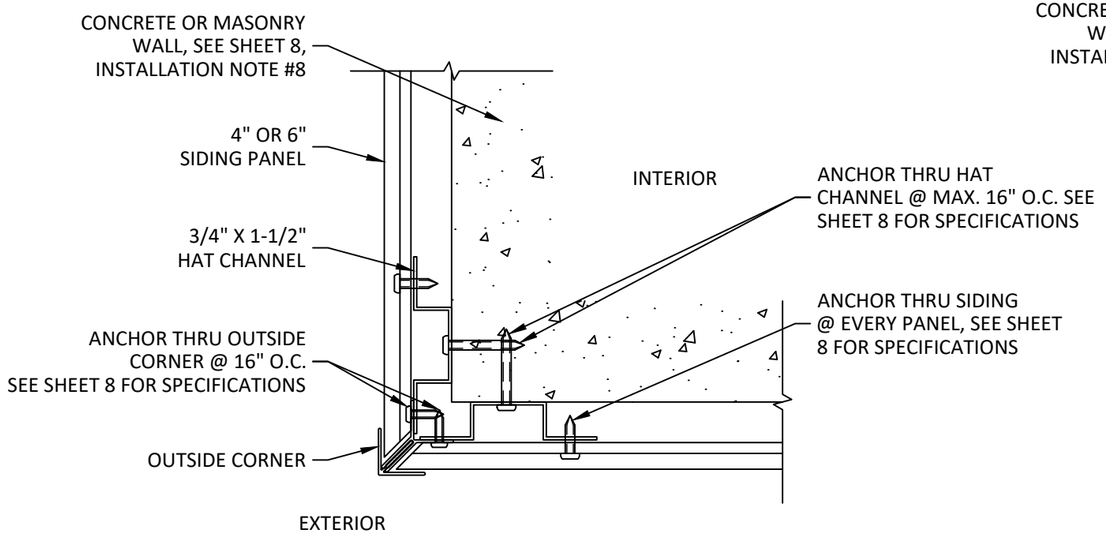

Q/7 HORIZONTAL SECTION
OUTSIDE CORNER

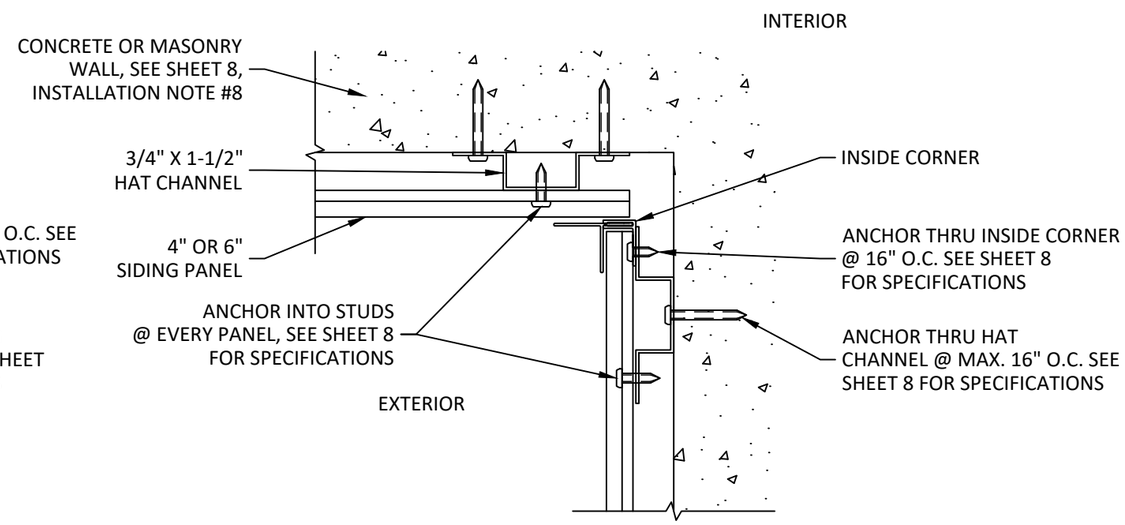

R/7 HORIZONTAL SECTION
INSIDE CORNER

VOSS SOLID
VOSS SOLID USA
4035 CHEYENNE CT.
CHINO, CALIFORNIA 91710
PH: (909) 393-2800 FX: (909) 393-2831

TITLE: LYNX ALUMINUM SIDING (HVHZ) HORIZONTAL SECTIONS

PREPARED BY: BUILDING DROPS, INC.
1900 NE MIAMI COURT, SUITE 2-15
MIAMI, FL 33132
PH: (954) 399-8478
FAX: (954) 744-4738
WEB: www.buildingdrops.com

REMARKS	BY	DATE

THE INSTALLATION DETAILS DESCRIBED HEREIN ARE GENERIC AND MAY NOT REFLECT ACTUAL CONDITIONS FOR A SPECIFIC SITE. IF SITE CONDITIONS CAUSE INSTALLATION TO DEVIATE FROM THE REQUIREMENTS DETAILED HEREIN, A LICENSED ENGINEER OR ARCHITECT SHALL PREPARE SITE SPECIFIC DOCUMENTS FOR USE WITH THIS DOCUMENT.

HERMES F. NORERO LICENSE No. 73778 STATE OF FLORIDA PROFESSIONAL ENGINEER

HERMES F. NORERO P.E.
FLORIDA P.E. No 73778
BUILDING DROPS, INC
1900 NE MIAMI COURT, SUITE 2-15
MIAMI, FL 33132
FBPE CERT. OF AUTHORIZATION No. 29578

FL #: FL47912

DATE: 11.05.2025

DWG. BY: MS | CHK. BY: HFN

SCALE: NTS

DWG. #: VSU001

SHEET: 7 OF 9

11/25/2025 2:27 PM
c:\users\mengisun\building drops, inc\building drops landing - common\projects\all green building products\fbc-25-0348.1 - fbc submittal - lynx siding\dwgs\vsu001.dwg

INSTALLATION NOTES:

1. ONE (1) INSTALLATION ANCHOR IS REQUIRED AT EACH ANCHOR LOCATION.

2. THE NUMBER OF INSTALLATION ANCHORS DEPICTED IS THE MINIMUM NUMBER OF ANCHORS TO BE USED FOR PRODUCT INSTALLATION OF THE MAXIMUM SIZE LISTED.

3. INSTALL INDIVIDUAL INSTALLATION ANCHORS WITHIN A TOLERANCE OF ±1/4 INCH THE DEPICTED LOCATION & SPACING IN THE ANCHOR LAYOUT DETAILS (I.E., WITHOUT CONSIDERATION OF TOLERANCES). TOLERANCES ARE NOT CUMULATIVE FROM ONE INSTALLATION ANCHOR TO THE NEXT.

4. MINIMUM EMBEDMENT AND EDGE DISTANCE EXCLUDE WALL FINISHES, INCLUDING BUT NOT LIMITED TO STUCCO, FOAM, BRICK VENEER, AND SIDING.

5. INSTALLATION ANCHORS AND ASSOCIATED HARDWARE MUST BE MADE OF CORROSION RESISTANT MATERIAL OR HAVE A CORROSION RESISTANT COATING.

6. FOR HOLLOW BLOCK AND GROUT FILLED BLOCK, DO NOT INSTALL INSTALLATION ANCHORS INTO MORTAR JOINTS. EDGE DISTANCE IS MEASURED FROM FREE EDGE OF BLOCK OR EDGE OF MORTAR JOINT INTO FACE SHELL OF BLOCK.

7. INSTALLATION ANCHORS SHALL BE INSTALLED IN ACCORDANCE WITH ANCHOR MANUFACTURER'S INSTALLATION INSTRUCTIONS, AND ANCHORS SHALL NOT BE USED IN SUBSTRATES WITH STRENGTHS LESS THAN THE MINIMUM STRENGTH SPECIFIED BY THE ANCHOR MANUFACTURER.

8. INSTALLATION ANCHOR CAPACITIES FOR PRODUCTS HEREIN ARE BASED ON SUBSTRATE MATERIALS WITH THE FOLLOWING PROPERTIES:
   - A. 5/8" (5-PLY) PLYWOOD SUPPORTED BY 2X WOOD STUDS OR 2X6 METAL STUDS, EACH AT 16" O.C.
     - A.a. WOOD STUDS - MINIMUM SPECIFIC GRAVITY OF 0.55.
     - A.b. STEEL STUDS - MINIMUM YIELD STRENGTH OF 33 KSI. MINIMUM WALL THICKNESS OF 49 MILS (18 GAUGE).
     - A.c. ALUMINUM STUDS - 1/8" MINIMUM THICKNESS (6063-T5).
   - B. CONCRETE - MINIMUM COMPRESSIVE STRENGTH OF 3000 PSI.
   - C. GROUT-FILLED CMU - UNIT STRENGTH CONFORMS TO ASTM C-90 WITH MINIMUM COMPRESSIVE STRENGTH OF 2000 PSI AND GROUT CONFORMS TO ASTM C 476, MINIMUM GROUT COMPRESSIVE STRENGTH OF 2000 PSI.
   - D. HOLLOW BLOCK CMU - UNIT STRENGTH CONFORMS TO ASTM C-90.

ANCHOR SCHEDULE

LOCATION	SUBSTRATE	ANCHOR TYPE	MIN. EMBEDMENT	MIN. EDGE DISTANCE
THROUGH SIDING/ J-MOLD/ STARTER STRIP/ H-MOLD/ OUTSIDE AND INSIDE CORNER TO SUBSTRATE	WOOD: MIN. S.G. = 0.55	#8 WOOD SCREW	1-1/2"	1/2"
	STEEL: MIN. 18 GA. MIN. Fy = 33 ksi	#8 GRADE 5 SELF-DRILLING/ SELF-TAPPING SCREW	3 THREADS MIN PENETRATION BEYOND METAL	1/2"
	ALUMINUM: MIN. 1/8" THICK MIN. 6063-T5			
	CONCRETE: MIN. f'c = 3000 psi	3/16" ITW TAPCON	1"	1"
	MASONRY: HOLLOW OR GROUT-FILLED CMU per ASTM C90 MIN. 2000 PSI	3/16" ITW TAPCON	1"	2"
THROUGH HAT CHANNEL TO SUBSTRATE	CONCRETE: MIN. f'c = 3000 psi	3/16" ITW TAPCON	1"	1"
	MASONRY: HOLLOW OR GROUT-FILLED CMU per ASTM C90 MIN. 2000 PSI	3/16" ITW TAPCON*	1"	2"
		3/16" DEWALT ULTRACON+	1-3/4"	2"
THROUGH SIDING TO HAT CHANNEL	MIN. 15 GAUGE THICK 6063-T5 ALUMINUM HAT CHANNEL	#8 TEK SCREW	3 THREADS MIN PENETRATION BEYOND METAL	1/2"

* THE 3/16" ITW TAPCON THROUGH HAT CHANNEL SHALL BE SPACED AT MAXIMUM 12" O.C. WHEN INSTALLED ON MASONRY SUBSTRATE.

VOSS SOLID USA
4035 CHEYENNE CT.
CHINO, CALIFORNIA 91710
PH: (909) 393-2800 FX: (909) 393-2831

TITLE: LYNX ALUMINUM SIDING (HVHZ) INSTALLATION NOTES & ANCHOR TABLE

PREPARED BY: BUILDING DROPS, INC.
1900 NE MIAMI COURT, SUITE 2-15
MIAMI, FL 33132
PH: (954) 399-8478
FAX: (954) 744-4738
WEB: www.buildingdrops.com

REMARKS	BY	DATE

THE INSTALLATION DETAILS DESCRIBED HEREIN ARE GENERIC AND MAY NOT REFLECT ACTUAL CONDITIONS FOR A SPECIFIC SITE. IF SITE CONDITIONS CAUSE INSTALLATION TO DEVIATE FROM THE REQUIREMENTS DETAILED HEREIN, A LICENSED ENGINEER OR ARCHITECT SHALL PREPARE SITE SPECIFIC DOCUMENTS FOR USE WITH THIS DOCUMENT.

HERMES F. NORERO LICENSE No. 73778 STATE OF FLORIDA PROFESSIONAL ENGINEER

HERMES F. NORERO P.E.
FLORIDA P.E. No 73778
BUILDING DROPS, INC
1900 NE MIAMI COURT, SUITE 2-15
MIAMI, FL 33132
FBPE CERT. OF AUTHORIZATION No. 29578

FL #: FL47912

DATE: 11.05.2025

DWG. BY: MS | CHK. BY: HFN

SCALE: NTS

DWG. #: VSU001

SHEET: 8 OF 9

11/25/2025 2:27 PM
c:\users\mengqisun\building drops, inc\building drops landing - common\projects\all green building products\fbc-25-0348.1 - fbc submittal - lynx siding\dwg\vsu001.dwg

BILL OF MATERIALS		
ITEM #	DESCRIPTION	MATERIAL
1	6" SIDING PANEL (SOLID OR VENTED)	ALUMINUM 6063-T5
2	4" SIDING PANEL (SOLID OR VENTED)	ALUMINUM 6063-T5
3	J-MOLD - TWO-PIECE	ALUMINUM 6063-T5
4	STARTER STRIP	ALUMINUM 6063-T5
5	3/4" X 1-1/2" HAT CHANNEL	ALUMINUM 6063-T5
6	H-MOLD - TWO-PIECE	ALUMINUM 6063-T5
7	OUTSIDE CORNER - TWO-PIECE	ALUMINUM 6063-T5
8	INSIDE CORNER - TWO-PIECE	ALUMINUM 6063-T5

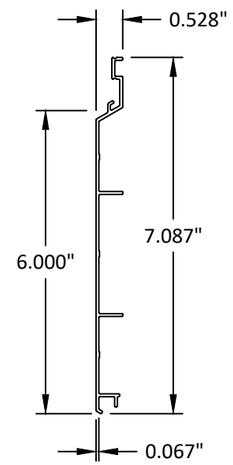

1 6" SIDING PANEL (SOLID OR VENTED)

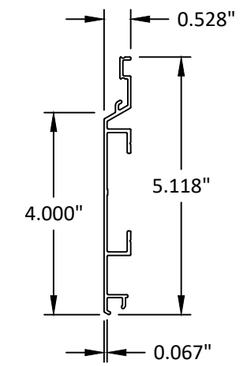

2 4" SIDING PANEL (SOLID OR VENTED)

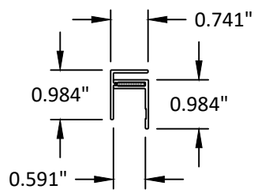

3 J-MOLD - TWO-PIECE

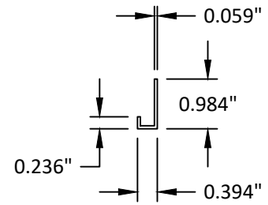

4 STARTER STRIP

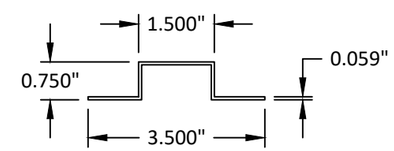

5 3/4" X 1-1/2" HAT CHANNEL

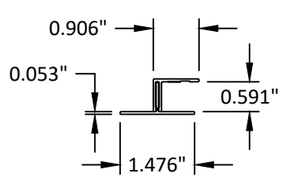

6 H-MOLD - TWO-PIECE

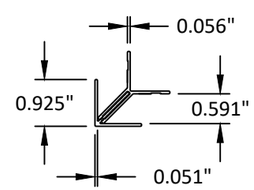

7 OUTSIDE CORNER - TWO-PIECE

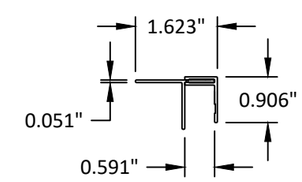

8 INSIDE CORNER - TWO-PIECE

VS VOSS SOLID

VOSS SOLID USA
4035 CHEYENNE CT.
CHINO, CALIFORNIA 91710
PH: (909) 393-2800 FX: (909) 393-2831

TITLE: LYNX ALUMINUM SIDING (HVHZ)

BILL OF MATERIALS & COMPONENTS

PREPARED BY: BUILDING DROPS, INC.
1900 NE MIAMI COURT, SUITE 2-15
MIAMI, FL 33132
PH: (954) 399-8478
FAX: (954) 744-4738
WEB: www.buildingdrops.com

REMARKS	BY	DATE

THE INSTALLATION DETAILS DESCRIBED HEREIN ARE GENERIC AND MAY NOT REFLECT ACTUAL CONDITIONS FOR A SPECIFIC SITE. IF SITE CONDITIONS CAUSE INSTALLATION TO DEVIATE FROM THE REQUIREMENTS DETAILED HEREIN, A LICENSED ENGINEER OR ARCHITECT SHALL PREPARE SITE SPECIFIC DOCUMENTS FOR USE WITH THIS DOCUMENT.

HERMES F. NORERO LICENSE No. 73778 STATE OF FLORIDA PROFESSIONAL ENGINEER

HERMES F. NORERO P.E.
FLORIDA P.E. No 73778
BUILDING DROPS, INC
1900 NE MIAMI COURT, SUITE 2-15
MIAMI, FL 33132
FBPE CERT. OF AUTHORIZATION No. 29578

FL #: FL47912

DATE: 11.05.2025

DWG. BY: MS

CHK. BY: HFN

SCALE: NTS

DWG. #: VSU001

SHEET: 9 OF 9

11/25/2025 2:27 PM
c:\users\mengasun\building drops, inc\building drops landing - common\projects\all green building products\fbc-25-0348.1 - fbc submittal - lynx siding\dwgs\vsu001.dwg